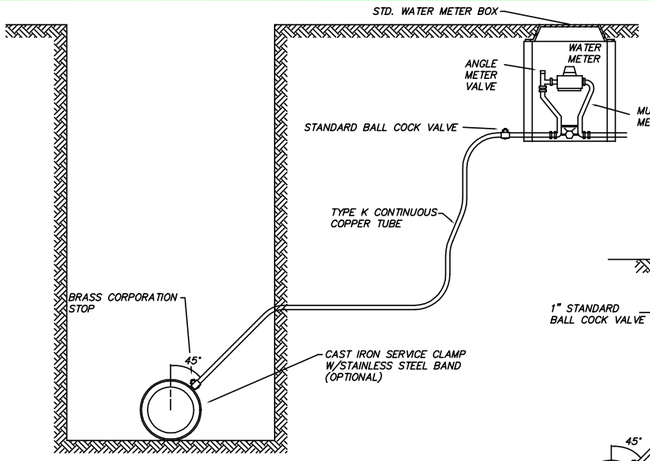

NOTES:

1. ALWAYS PUT A BEND OR "GOOSENECK" IN SERVICE LINE PRIOR TO CONNECTING TO PROVIDE FLEXIBILITY AND "GIVE" TO COUNTERACT THE EFFECTS OF A LOAD DUE TO SETTLEMENT OR EXPANSION AND/OR CONTRACTION.
2. SOIL AROUND SERVICE CONNECTION SHALL BE COMPACTED TO DENSITY OF SURROUNDING SOIL.

WATER SERVICE LINE CONNECTION

NOT TO SCALE

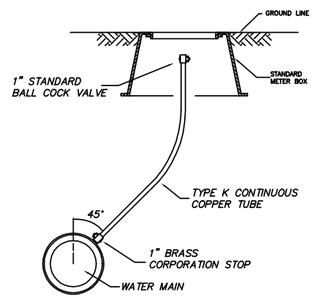

STANDARD BLOW-OFF DETAIL

NOT TO SCALE

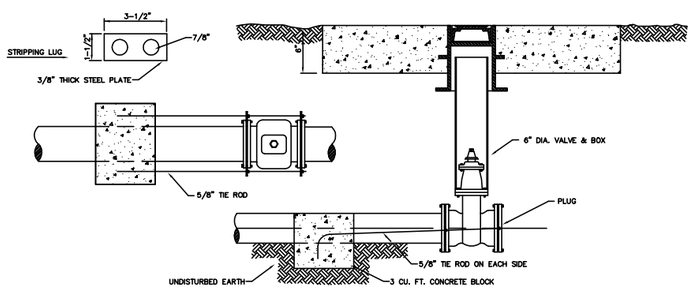

VALVE RESTRAINT DETAIL

NOT TO SCALE

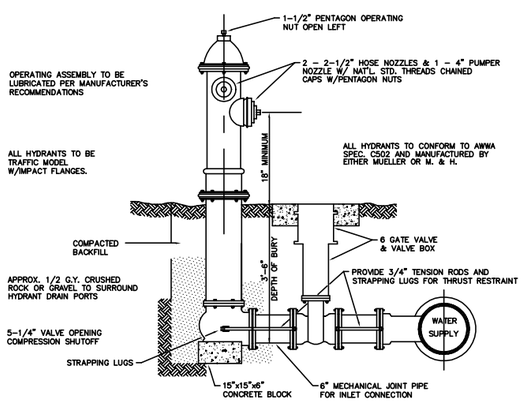

NOTE:
FIRE HYDRANT ASSEMBLY SHALL INCLUDE HYDRANT, GATE VALVE & BOX AND CONCRETE BLOCKING COMPLETE. " TEE " SHALL BE INCLUDED IN OTHER ITEMS.

TYPICAL FIRE HYDRANT ASSEMBLY

NOT TO SCALE

The City Of Enid
401 West Pine Street
P.O. Box 1768
Enid, Oklahoma 73702
Telephone: (580) 234-0400 Fax: (580) 234-8946

Contacts:

Robert Hitt, Director of Engineering Services, Ext 344
Jason Brinley, Civil Engineer, Ext 346

The City Of Enid, Oklahoma

REVISIONS

Number	Date	Description

Project Number:

Project Location:

Sheet Title: MISCELLANEOUS WATER LINE CONSTRUCTION STANDARD

Project Title:

SWD – 2 Sht. 1

Engr. Seal: REGISTERED PROFESSIONAL ENGINEER ROBERT S. HITT 13111 OKLAHOMA

Date:	6/1/00
Scale:	NO SCALE
Cad File:	G:\DATA\SPECS\SWD2
Drawn By:	P.B./C.L.H.
Designed By:	R.H.
Approved By:	R.H.
Sheet:	of

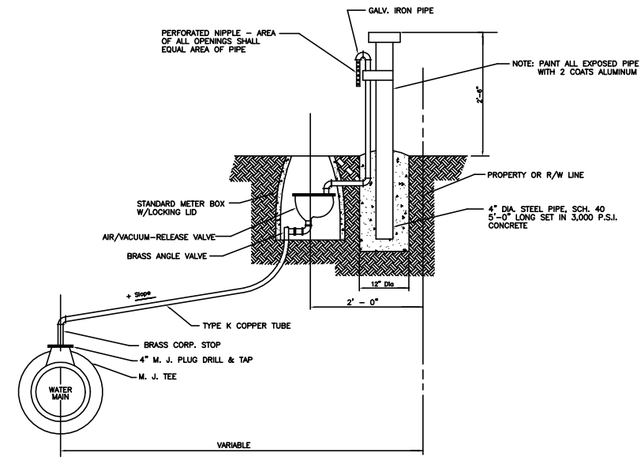

DETAIL OF AIR/VACUUM – RELEASE VALVE

NOT TO SCALE

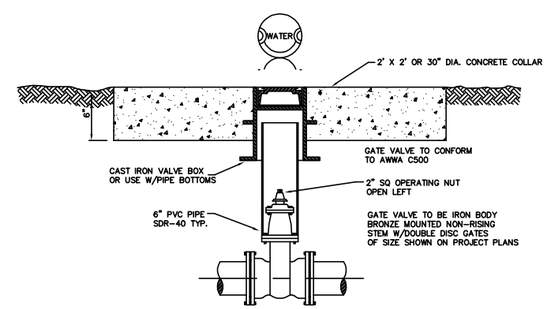

STANDARD DETAIL GATE VALVE & VALVE BOX

NOT TO SCALE

The City Of Enid
401 West Pine Street
P.O. Box 1768
Enid, Oklahoma 73702
Telephone: (580) 234-0400 Fax: (580) 234-8946

Contacts:

Robert Hitt, Director of Engineering Services, Ext 344
Jason Brinley, Civil Engineer, Ext 346

The City Of Enid, Oklahoma

REVISIONS

Number	Date	Description

Project Number:

Project Location:

Sheet Title: MISCELLANEOUS WATER LINE CONSTRUCTION STANDARD

Project Title:

SWD – 2 Sht. 2

Engr. Seal: REGISTERED PROFESSIONAL ENGINEER ROBERT S. HITT 13111 OKLAHOMA

Date:	6/1/00
Scale:	NO SCALE
Cad File:	G:\DATA\SPECS\SWD2
Drawn By:	P.B./C.L.H.
Designed By:	R.H.
Approved By:	R.H.
Sheet:	of